Recloser EL-AXRECL KLAMP



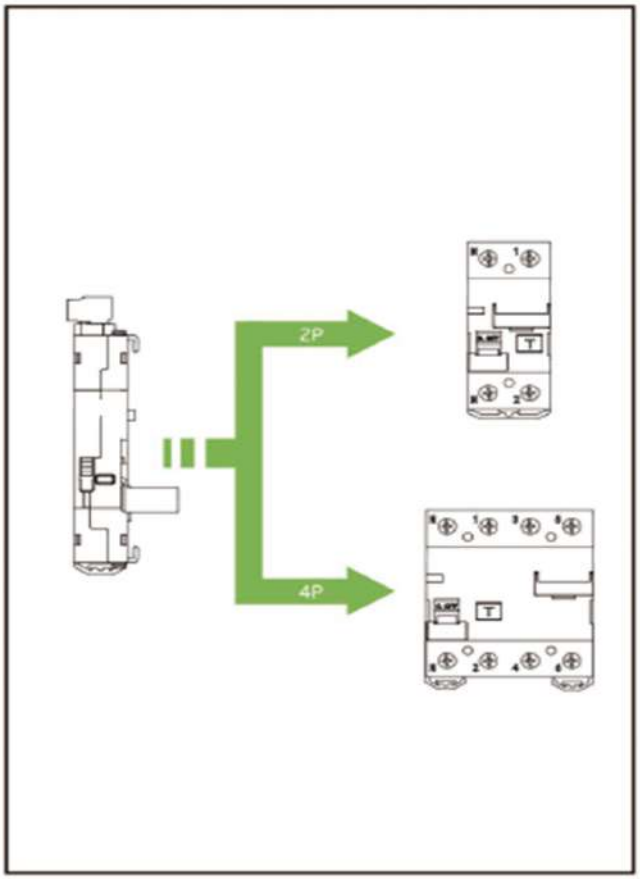

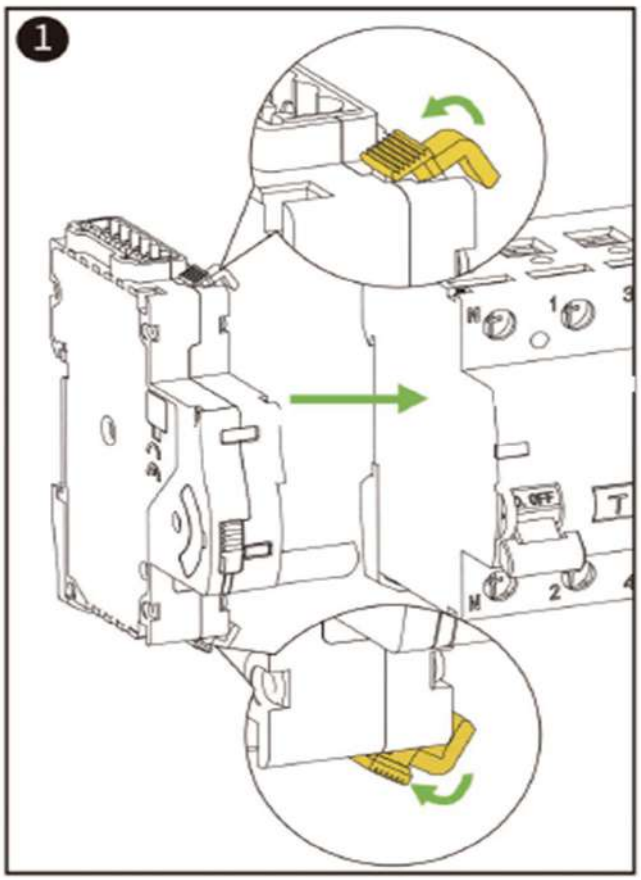

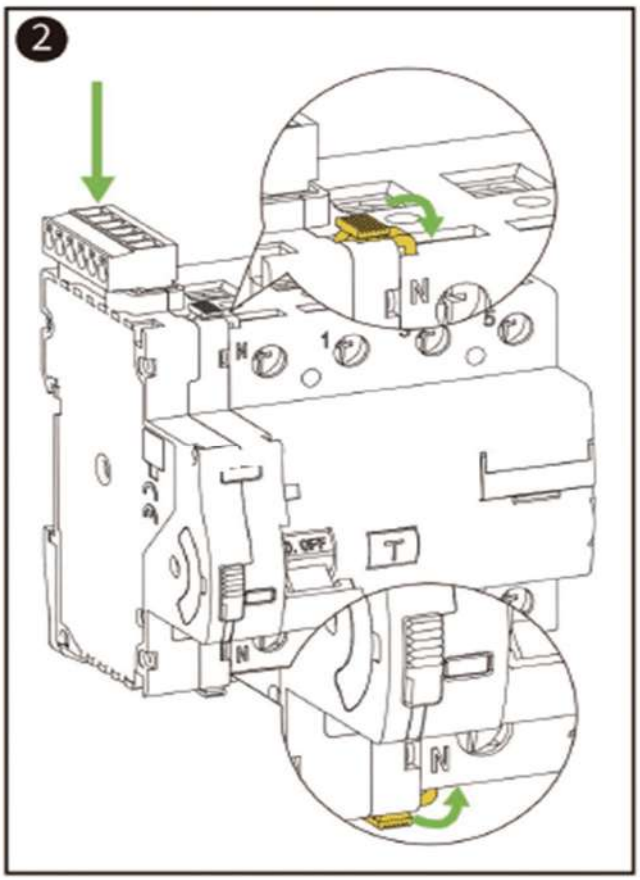

ELCART DISTRIBUTION SPA via Michelangelo Buonarroti, 46 - 20093 Cologno Monzese (Milano) ITALY
Tel. +39 02.25117310 - www.elcart.com - tecnico@elcart.it - industria@elcart.it - sicurezza.prodotti@elcart.it

La divulgazione dei dati contenuti in questa scheda è da ritenersi un servizio puramente informativo e non costituisce alcun vincolo da parte della Elcart in merito a prestazioni ed utilizzo del prodotto.
The divulgation of data contained on this technical sheet are exclusively for informational reasons and establish no link on behalf of Elcart regard to the performances and the use of the product.
La divulgacion de los datos contenidos en esta ficha son un servicio unicamente informativo y no constituyen ningun vinculo de parte de Elcart respecto a las prestaciones y uso del producto.

Recloser

EL-AXRECL

KLAMP

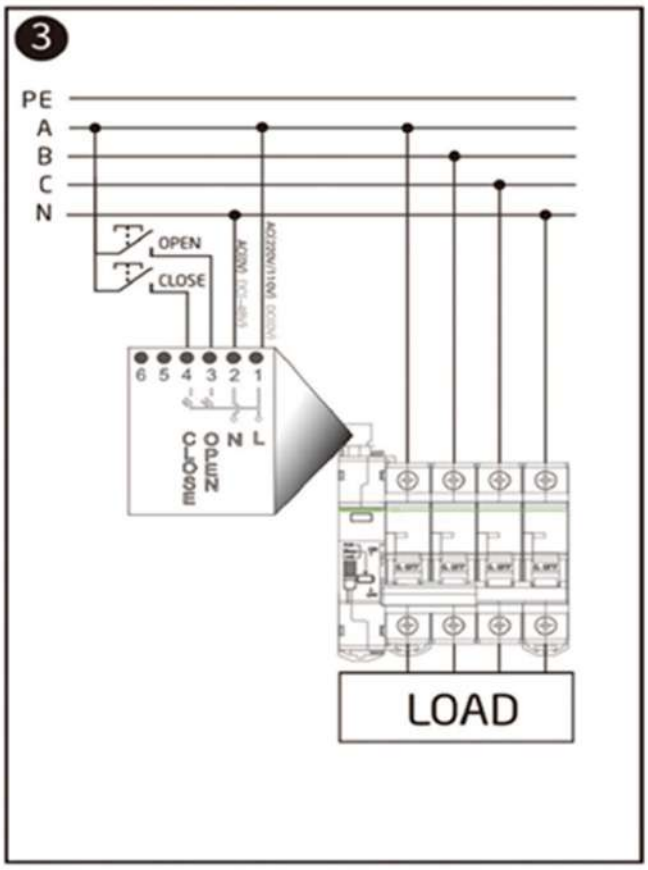

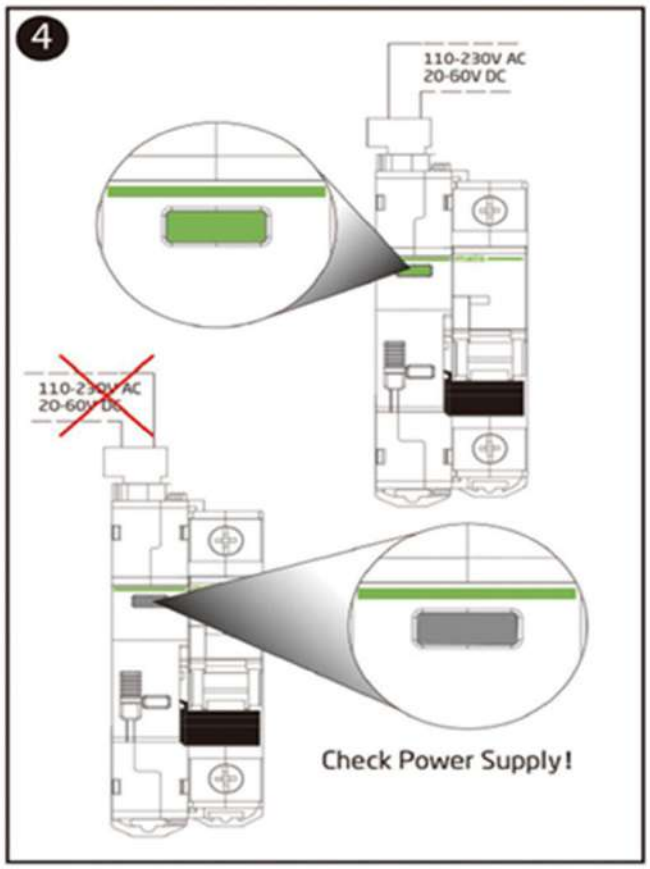

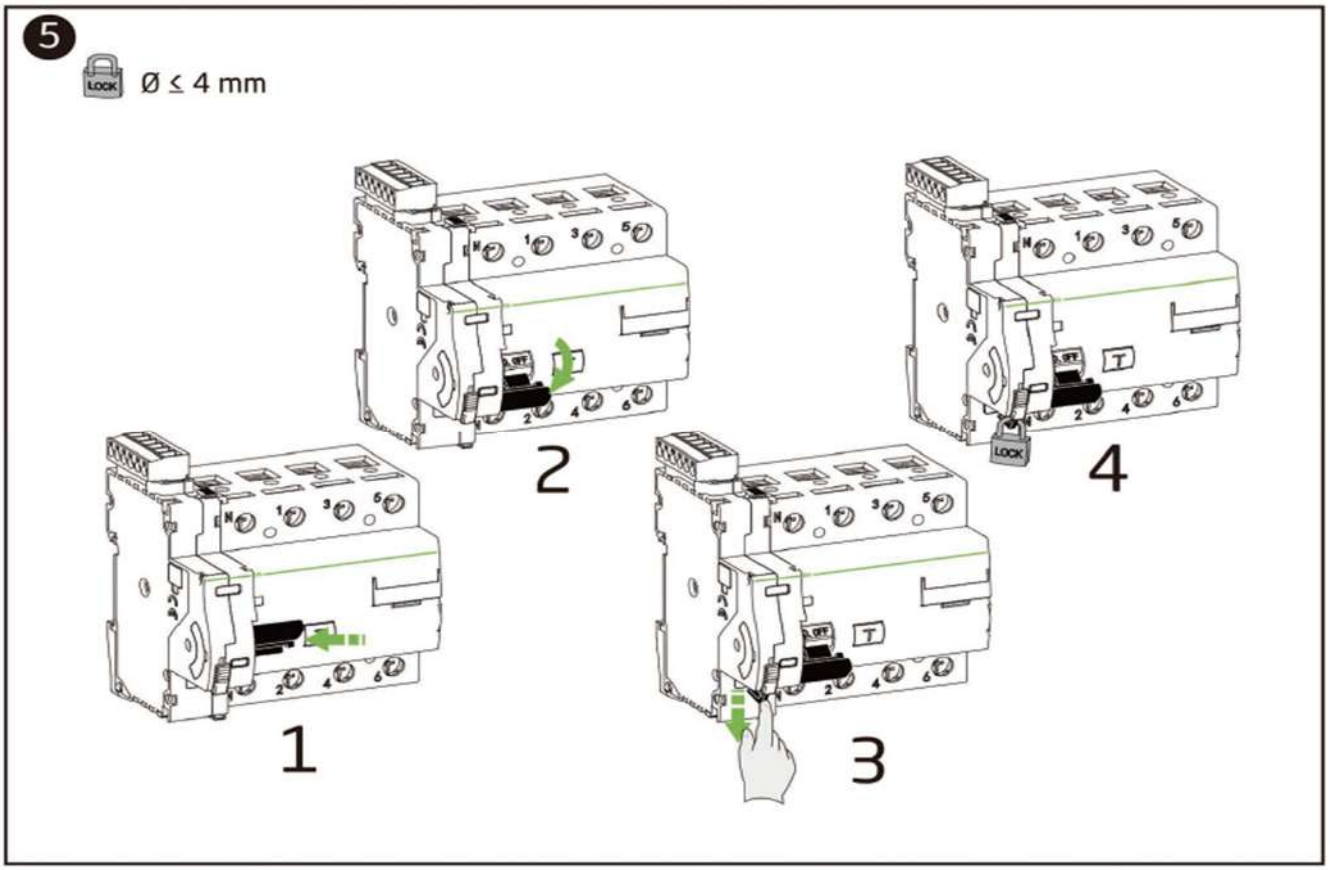

ELCART DISTRIBUTION SPA via Michelangelo Buonarroti, 46 - 20093 Cologno Monzese (Milano) ITALY
Tel. +39 02.25117310 - www.elcart.com - tecnico@elcart.it - industria@elcart.it - sicurezza.prodotti@elcart.it

La divulgazione dei dati contenuti in questa scheda è da ritenersi un servizio puramente informativo e non costituisce alcun vincolo da parte della Elcart in merito a prestazioni ed utilizzo del prodotto.
The divulgation of data contained on this technical sheet are exclusively for informational reasons and establish no link on behalf of Elcart regard to the performances and the use of the product.
La divulgacion de los datos contenidos en esta ficha son un servicio unicamente informativo y no constituyen ningun vinculo de parte de Elcart respecto a las prestaciones y uso del producto.

Recloser

EL-AXRECL

KLAMP

6

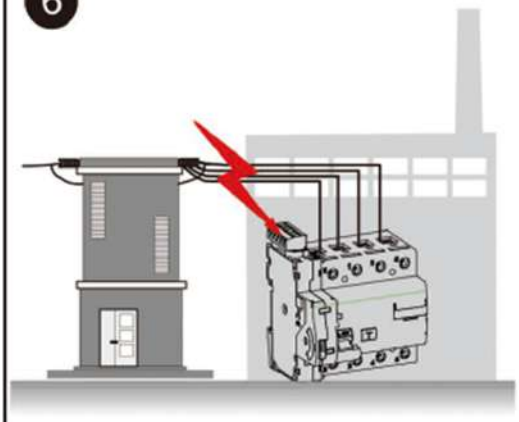

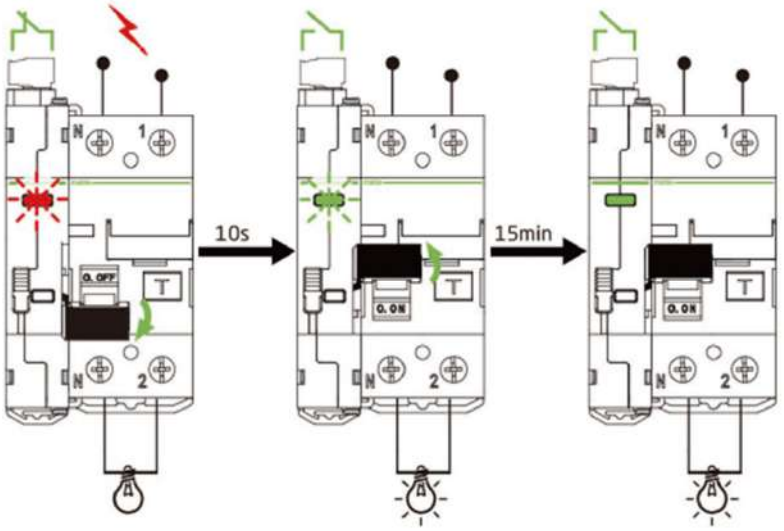

- Under "Auto" mode, and for instantaneous electrical fault, our recloser will auto reclose after 10s of breaker trips.
- It is defined as successfully reclosed if handle holds more than 15 minutes. After successfully reclosed, previous reclose counting will be cleared and renewed.

7

Working Status Indicator	
Closed	Green On
Open under Manual/Open under Auto	Red on
Reclosing after Fault Opening	Red Flashing
Stabilizing after Auto Reclosing	Green Flashing
Reclosing Failed after Three Automatic Reclosing	Red/Green Flashing Alternately
Adjust to Manual Mode	Red On

- Under "Auto" mode, and for continuous electrical fault,
- It will auto reclose after 10s time delay, and failed;
- It will auto reclose again after 60s time delay, and failed;
- It will auto reclose again after 300s time delay, and failed;
- It will switch to "Lock" status, and no more auto reclose

(Meanwhile, the terminal of remote On/Off functions)

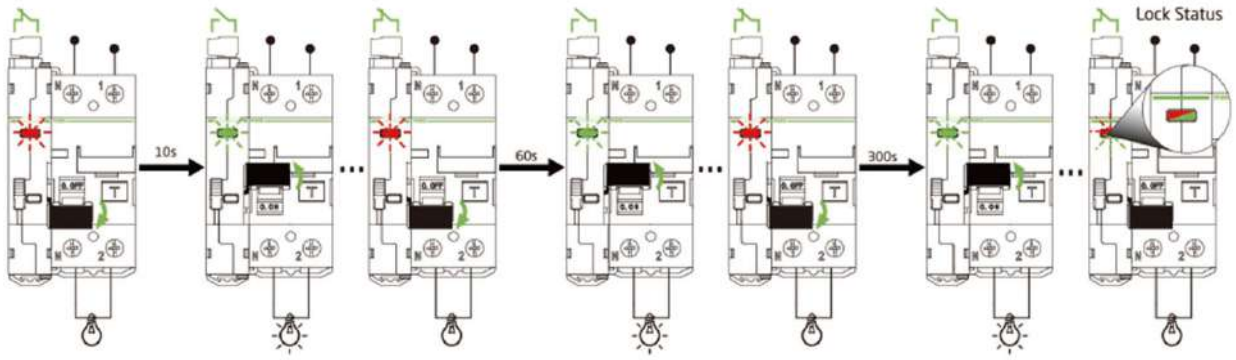

La divulgazione dei dati contenuti in questa scheda è da ritenersi un servizio puramente informativo e non costituisce alcun vincolo da parte della Elcart in merito a prestazioni ed utilizzo del prodotto.
The divulgation of data contained on this technical sheet are exclusively for informational reasons and establish no link on behalf of Elcart regard to the performances and the use of the product.
La divulgacion de los datos contenidos en esta ficha son un servicio unicamente informativo y no constituyen ningun vinculo de parte de Elcart respecto a las prestaciones y uso del producto.

Recloser

EL-AXRECL

KLAMP

8

Working Status Indicator	
Close	Green light is always on
Open	Red light is always on

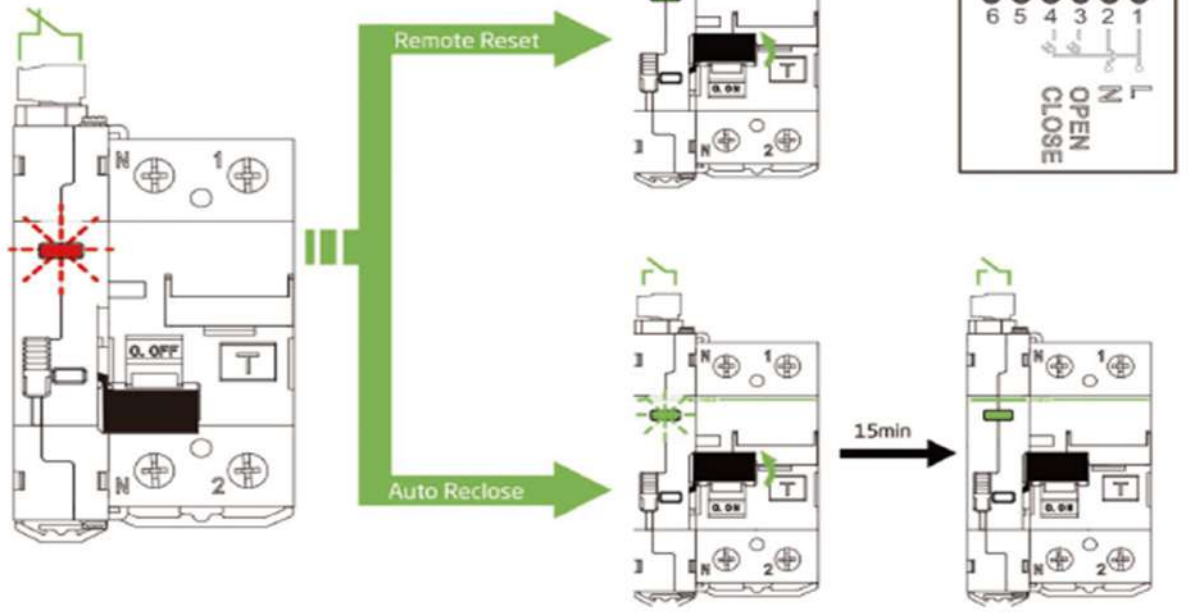

9

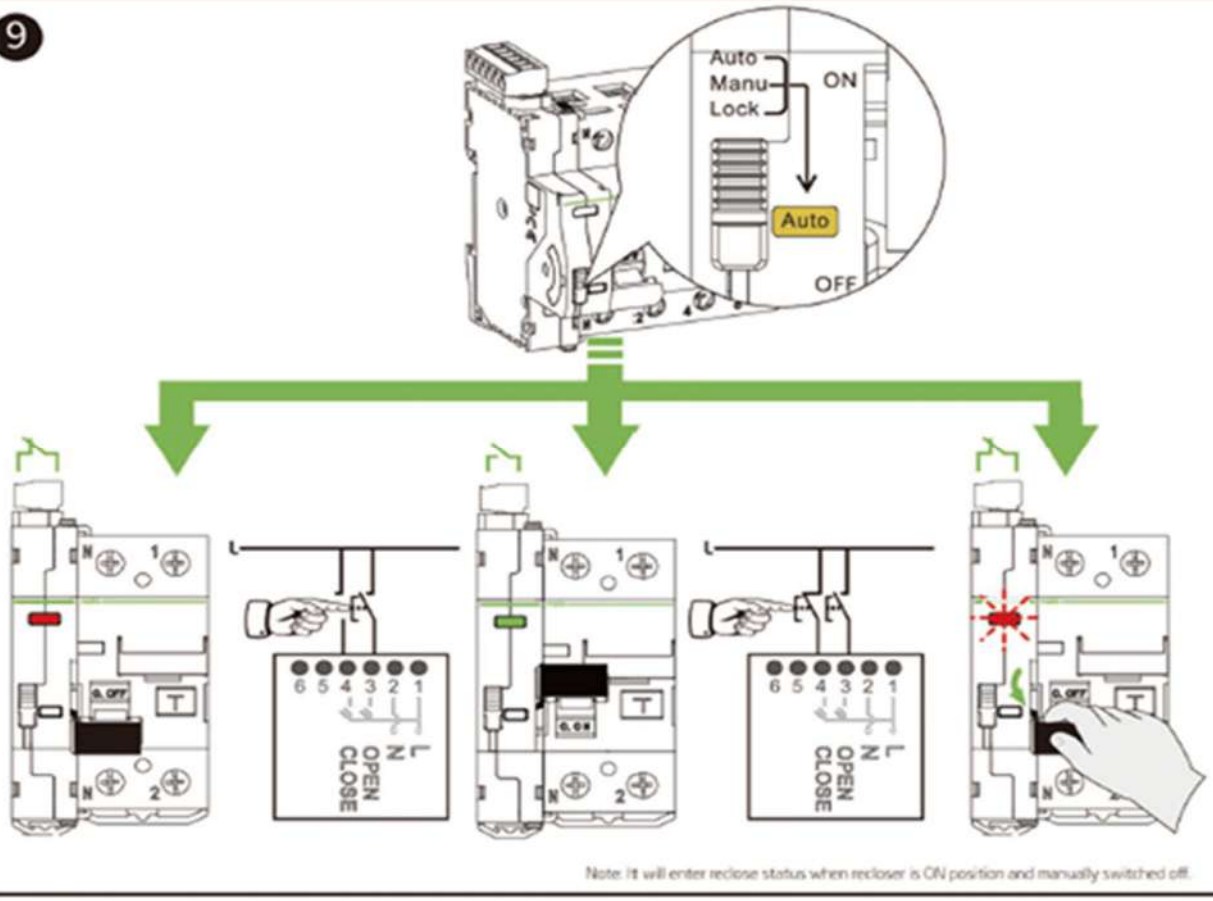

ELCART DISTRIBUTION SPA via Michelangelo Buonarroti, 46 - 20093 Cologno Monzese (Milano) ITALY
Tel. +39 02.25117310 - www.elcart.com - tecnico@elcart.it - industria@elcart.it - sicurezza.prodotti@elcart.it

La divulgazione dei dati contenuti in questa scheda è da ritenersi un servizio puramente informativo e non costituisce alcun vincolo da parte della Elcart in merito a prestazioni ed utilizzo del prodotto.
The divulgation of data contained on this technical sheet are exclusively for informational reasons and establish no link on behalf of Elcart regard to the performances and the use of the product.
La divulgacion de los datos contenidos en esta ficha son un servicio unicamente informativo y no constituyen ningun vinculo de parte de Elcart respecto a las prestaciones y uso del producto.

Recloser

EL-AXRECL

KLAMP

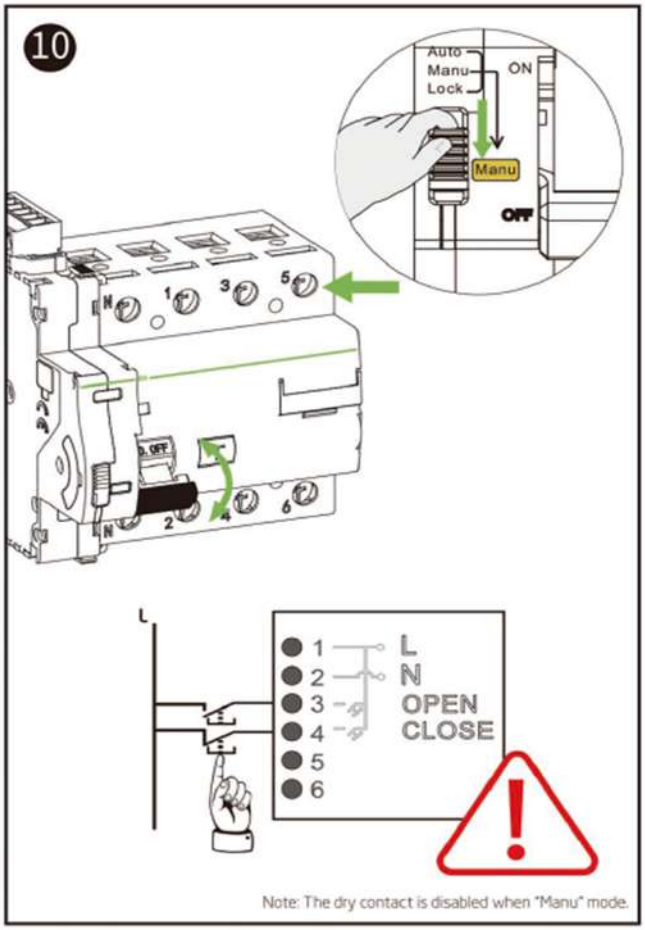

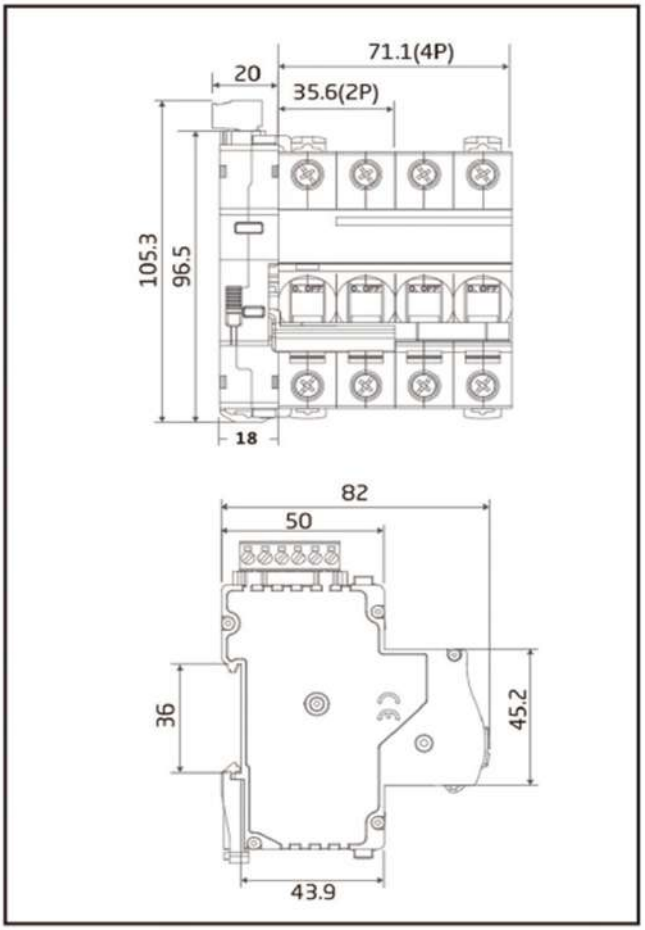

Electrical Characteristics	
Standard	YDT2346-2011
Power Distribution System	TN - S
Rated Voltage(Ue)	AC~220V(110V) DC~48V
Min Rated Voltage(Min Ue)	85% Ue
Max Rated Voltage(Max Ue)	110% Ue
Rated Insulation Voltage(Ui)	500V
Diaelectric Strength	2500V AC for 1 minute
Rated Withstand Voltage(Uimp)	4kV
Over-voltage Category	III
Rated Frequency	50/60Hz
Static Power	1VA
Power of Remote Operation	20VA
Breaking Capacity of Earthleakage (IΔm)	The IΔm of Related Breaker
Rated Residual Short Circuit Current (IΔc)	The IΔc of Related Breaker
Handle Length	1 - 2
MCB Type	1P - 2P - 3P - 4P
RCCB Type	AC - A - A[IR] - A[S]
Rated Current(In)	The In of Related Breaker
Rated Residual Current(IΔn)	The IΔn of Related Breaker
Mechanical Characteristics	
The Width of DIN Module	1

Reclosing Time Interval	10s - 60s - 300s
Max Operation Frequency	30open./h
Electrical Life	10000
Max. Auto Reclose Cycle	3
Reclosed Counting Reset Time	60s
Protection Grade	IP20 (Outside Panel) IP40 (Inside Panel)
Terminal Part of Breaker	Soft Cable: ≤ 1x16mm2 Hard Cable: ≤ 1x25mm2
Enviroment Characterisics	
Pollution Grade	2
Work Temperature	-25℃ +60℃
Storage Temperature	-40℃ +70℃
Relative Humidity	55℃ - RH 95%
Communication Parameter	
Baudrate	Default as 9600, Configurable
Check Digit	No Check digit
Data Digit	8
Stop Digit	1
Device Address	Factory Default Address: 1
Auxiliary Contact Characteristics	
Contact	yes
Contact Type	Electronic Relay

Rated Voltage	5V-230V AC/DC
Rated Current	0.6A (min) -1 (max)
Frequency	50Hz
Use Category	AC12
Auto Reclose Function	
Auto Reclose When Electric Fault Trip	•
Earthleakage Test	
Reclose Stops when Fault	•
Signal of Reclosing	•
Fault Signal Indicator	•
Function of Auto / Manual	•
Auxiliary Contact for Remote Operation	
Internal Electrical Protection	PTC

Warranty

All users who purchase the product enjoy a 24-month warranty period from the date of purchase. During the warranty period, if there is a quality problem which affects normal use, you can enjoy free repair and replacement. In case of irreversible damage caused by improper use, drop, installation and wiring errors, it can be repaired or replaced at a fee within the warranty period. If you disassemble and modify it by yourself, you will not enjoy the warranty service.

ELCART DISTRIBUTION SPA via Michelangelo Buonarroti, 46 - 20093 Cologno Monzese (Milano) ITALY
Tel. +39 02.25117310 - www.elcart.com - tecnico@elcart.it - industria@elcart.it - sicurezza.prodotti@elcart.it

La divulgazione dei dati contenuti in questa scheda è da ritenersi un servizio puramente informativo e non costituisce alcun vincolo da parte della Elcart in merito a prestazioni ed utilizzo del prodotto.
The divulgation of data contained on this technical sheet are exclusively for informational reasons and establish no link on behalf of Elcart regard to the performances and the use of the product.
La divulgacion de los datos contenidos en esta ficha son un servicio unicamente informativo y no constituyen ningun vinculo de parte de Elcart respecto a las prestaciones y uso del producto.

* PROCEDURA DI ASSOCIAZIONE VERSIONE TUYA (ART. 25/27100-00) *

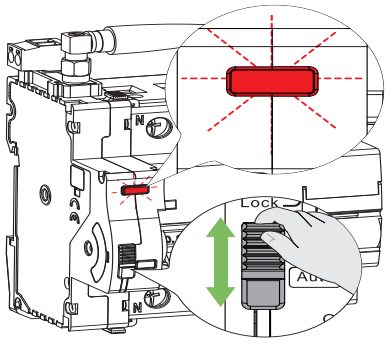

1.Switch the button from auto to manual then back to auto again, repeat the operation 2 times, the red light flashes and enter the distribution network mode.



2.Open the Tuya WIFi APP.



3.Click the Add button to add a device.



4.Enter WIFI information.

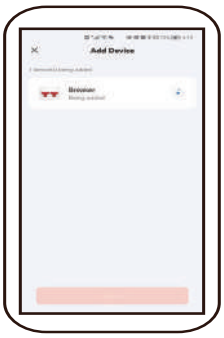

5.Wait for the device to be added.



6.Add device successfully.

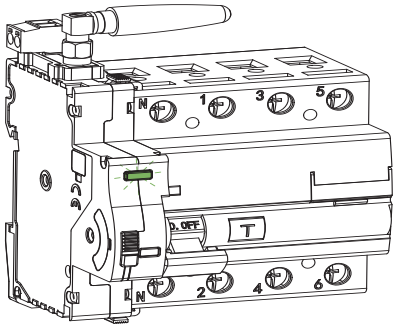

7.The green light flashes and the connection is successful. The device can be controlled by Tuya APP WiFi.

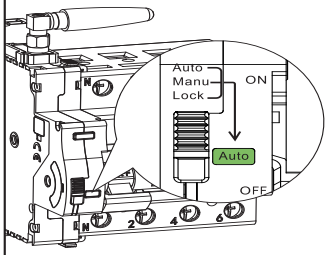

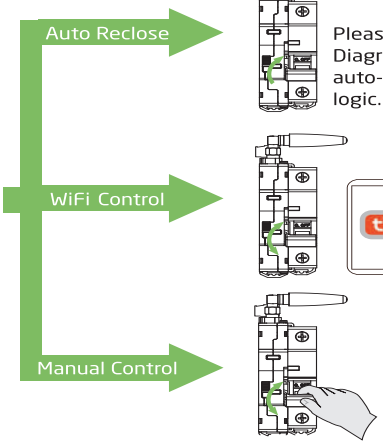

Please see Diagram 8 for auto-reclosing logic.

Note : Only MT53AW has auto-reclosing function.

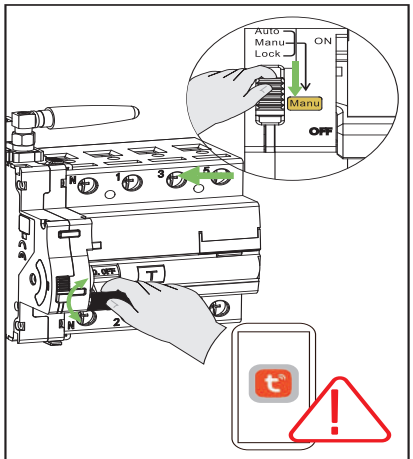

Note: The mobile phone software cannot be controlled in Manu mode.

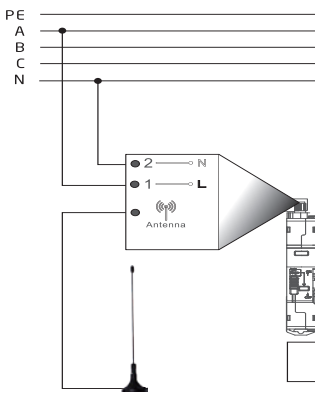



Use Tuya APP WiFi to control

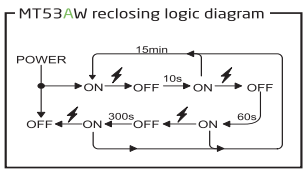

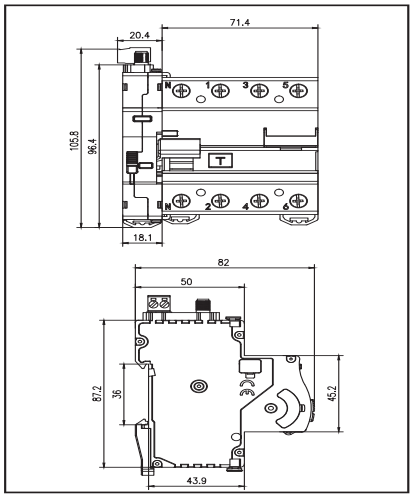

ELCART DISTRIBUTION SPA via Michelangelo Buonarroti, 46 - 20093 Cologno Monzese (Milano) ITALY
Tel. +39 02.25117310 - www.elcart.com - tecnico@elcart.it - industria@elcart.it - sicurezza.prodotti@elcart.it

La divulgazione dei dati contenuti in questa scheda è da ritenersi un servizio puramente informativo e non costituisce alcun vincolo da parte della Elcart in merito a prestazioni ed utilizzo del prodotto.
The divulgation of data contained on this technical sheet are exclusively for informational reasons and establish no link on behalf of Elcart regard to the performances and the use of the product.
La divulgacion de los datos contenidos en esta ficha son un servicio unicamente informativo y no constituyen ningun vinculo de parte de Elcart respecto a las prestaciones y uso del producto.